LOYOLA ACADEMY PARKING LOT

1100 LARAMIE AVENUE
WILMETTE, ILLINOIS

PROJECT BENCHMARKS

TOP OF N.E. FLANGE BOLT OF FIRE HYDRANT ON WEST SIDE OF LARAMIE AVE AT THE NORTHEAST CORNER OF NORTH PARCEL (AT THE INTERSECTION OF ILLINOIS RD AND LARAMIE AVE)
ELEVATION: 626.70 (ASSUMED DATUM)

TOP OF N.E. FLANGE BOLT OF FIRE HYDRANT ON WEST SIDE OF LARAMIE AVE AT THE SOUTHEAST CORNER OF NORTH PARCEL(AT THE INTERSECTION OF THORNWOOD AVE AND LARAMIE AVE)
ELEVATION: 625.80 (ASSUMED DATUM)

TOPOGRAPHY PROVIDED BY:
A.P. SURVEYING COMPANY, PC.
2121 PARKVIEW COURT
WILMETTE, IL 60091
(847)853-9364

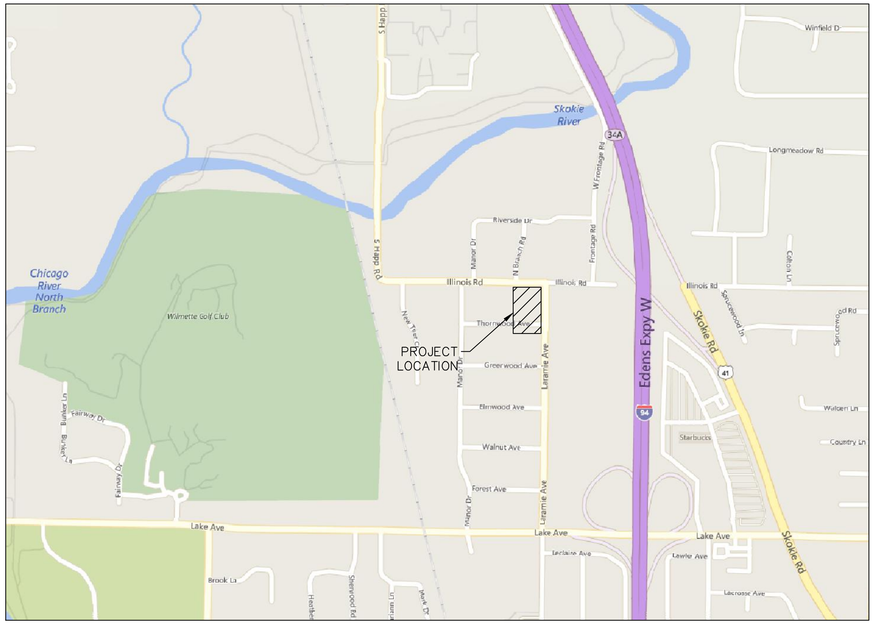

LOCATION MAP

NOT TO SCALE

SECTION -30 TOWNSHIP -42N RANGE -13E

COUNTY - COOK

INDEX OF SHEETS

1. COVER SHEET
2. REMOVAL PLAN
3. SITE PLAN
5. UTILITY PLAN
6. GRADING PLAN
7. SWPPP PLAN
8. SPECIFICATIONS
9. DETAILS

Call Before You Dig
JULIE ILLINOIS ONE CALL SYSTEM
Simply Call 811

ENGINEER: MATTHEW D. BUERGER
REGISTRATION NUMBER: 062-062123
EXP DATE: 11/30/17

MATHEW D. BUERGER REGISTERED NO. 062-062123 STATE OF ILLINOIS PROFESSIONAL ENGINEER

DATE:_____

THESE PLANS OR ANY PART THEREOF SHALL BE CONSIDERED VOID WITHOUT THE SIGNATURE AND SEAL OF THE ENGINEER.

FULL SIZE PLANS HAVE BEEN PREPARED USING STANDARD ENGINEERING SCALES. REDUCED SIZED PLANS WILL NOT CONFORM TO STANDARD SCALES. USE SCALE ON PLAN SHEET DRAWINGS ONLY FOR APPROXIMATE DIMENSIONS.

PRELIMINARY ENGINEERING
NOT FOR CONSTRUCTION

REVISIONS

NO.	DATE	MNGR	DESCRIPTION

K-PLUS ENGINEERING, LLC
WWW.KPLUS.COM
312.207.1600
329 W. 18TH STREET CHICAGO, IL 60616
15 SPINNING WHEEL ROAD HINSDALE, IL 60521

LOYOLA ACADEMY PARKING LOT
COVER SHEET
1100 LARAMIE AVENUE WILMETTE, IL 60091
LOYOLA ACADEMY

PROJ MGR:	MDB
PROJ ENG:	MLM
DATE:	02/24/16
PROJ NO.	25174

DRAWING NO: 1 OF 8 SHEETS

F:\CUSTOMERS\L\LOYOLA ACADEMY\PROJECTS\25174 - LOYOLA ACADEMY PARKING LOT DESIGN AND CONSTRUCTION\DWG\PLAN\25174- COVER.DWG

NOTES

1. THE CONTRACTOR SHALL EXERCISE DUE CAUTION DURING REMOVAL OF ITEMS TO NOT DAMAGE ADJACENT STRUCTURES OR UTILITIES. THE CONTRACTOR SHALL BE RESPONSIBLE FOR THE IMMEDIATE REPAIR TO DAMAGES CAUSED BY THEIR OPERATIONS. ALL REPAIRS SHALL BE DONE TO THE SATISFACTION OF THE OWNER.
2. THE CONTRACTOR SHALL ENSURE THAT STREETS IMPACTED BY THE PROJECT REMAIN CLEAR AND FREE OF DEBRIS AT ALL TIMES.
3. THE CONTRACTOR SHALL PROVIDE ALL CONSTRUCTION FENCING, BARRICADES, TEMPORARY WALK SURFACES, TEMPORARY SIGNAGE AND PROTECTION IF NECESSARY TO ASSURE THE SAFETY OF THE WORKERS, PEDESTRIANS, AND MOTORISTS. REFER TO TRAFFIC CONTROL & PROTECTION DETAILS.
4. THE VILLAGE AND MWRDGC SHALL BE NOTIFIED 48 HOURS PRIOR TO COMMENCEMENT OF WORK.

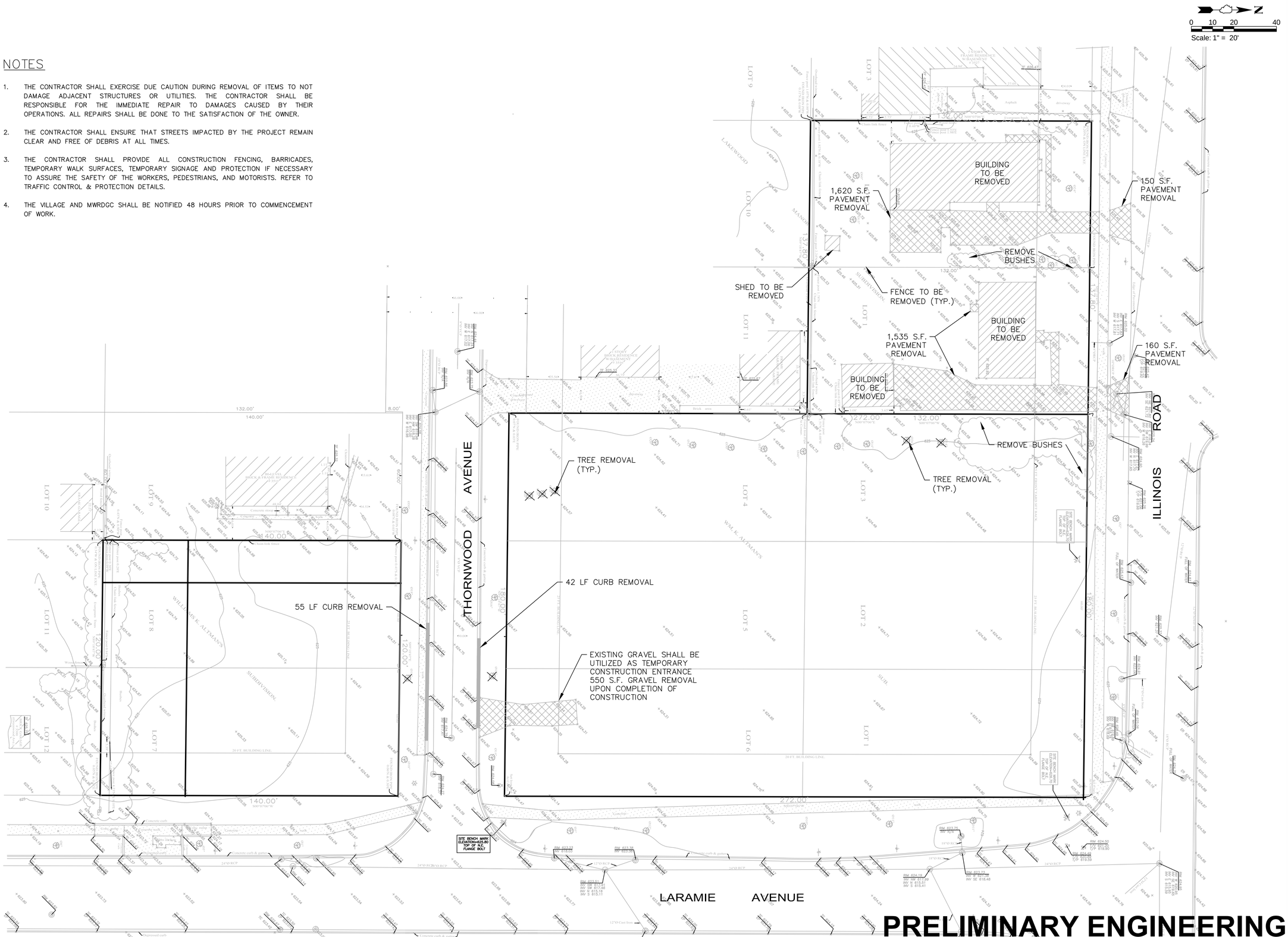

PRELIMINARY ENGINEERING
NOT FOR CONSTRUCTION

REVISIONS			
NO.	DATE	MNGR	DESCRIPTION

K-PLUS ENGINEERING, LLC
WWW.KPLUS.COM
312.207.1600
329 W. 18TH STREET
CHICAGO, IL 60616
15 SPINNING WHEEL ROAD
HINSDALE, IL 60521

LOYOLA ACADEMY PARKING LOT
REMOVAL PLAN
1100 LARAMIE AVENUE
WILMETTE, IL 60091
LOYOLA ACADEMY

PROJ MGR:	MDB
PROJ ENG:	MLM
DATE:	02/24/16
PROJ NO.	25174
DRAWING NO:	2
OF	8 SHEETS

F:\CUSTOMERS\L\LOYOLA ACADEMY\PROJECTS\25174 - LOYOLA ACADEMY PARKING LOT DESIGN AND CONSTRUCTION\DWG\PLAN\25174- REMOVAL PLAN.DWG

NOTES:

1. ALL DIMENSIONS ARE TO EDGE OF PAVEMENT UNLESS NOTED.

PARKING SUMMARY:

NORTH PARKING LOT STALLS –	122
SOUTH PARKING LOT STALLS –	16
TOTAL PARKING LOT STALLS –	138

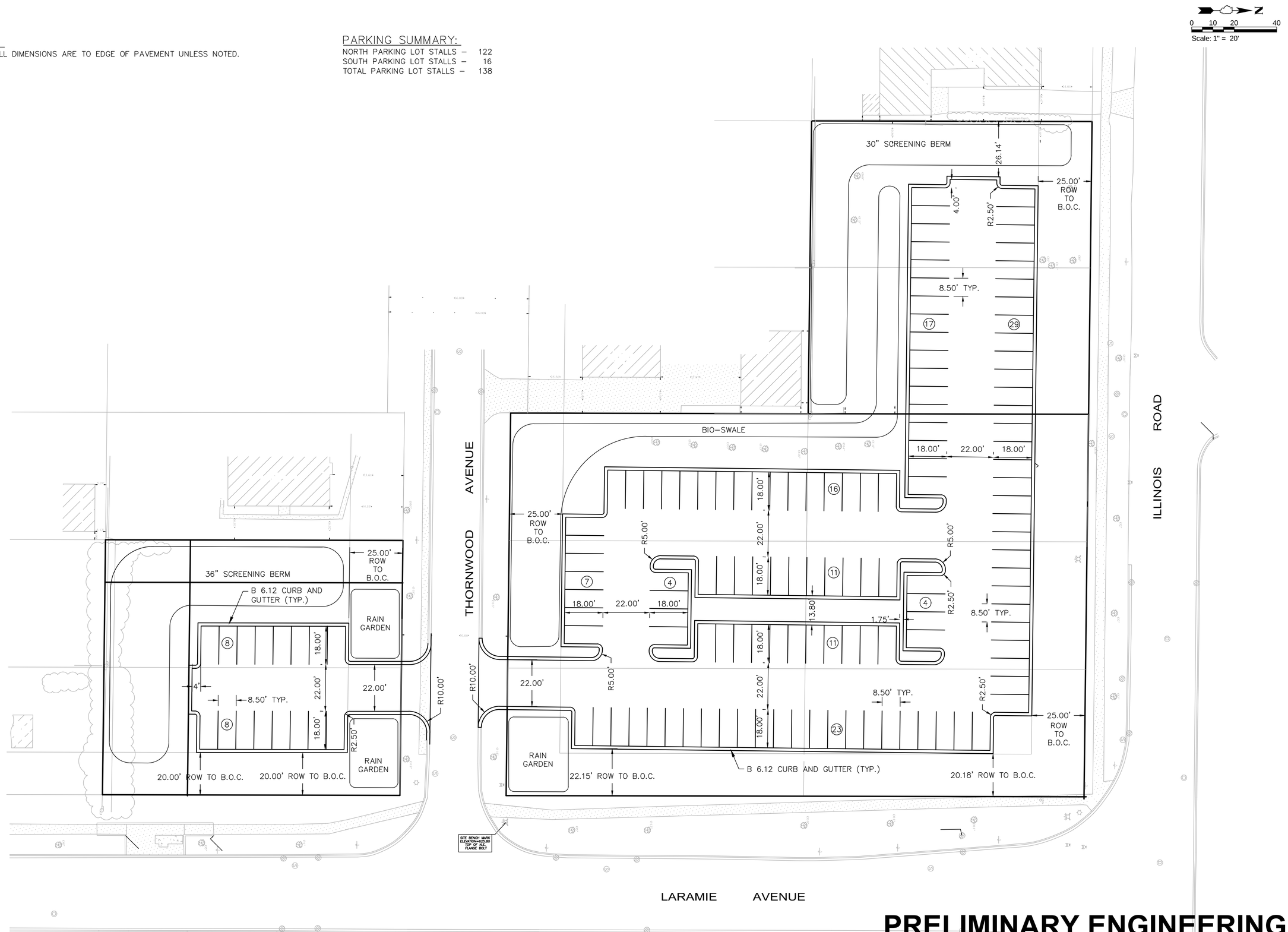

PRELIMINARY ENGINEERING
NOT FOR CONSTRUCTION

REVISIONS

NO.	DATE	MNGR	DESCRIPTION

K-PLUS ENGINEERING, LLC
WWW.KPLUS.COM
312.207.1600
329 W. 18TH STREET
CHICAGO, IL 60616
15 SPINNING WHEEL ROAD
HINSDALE, IL 60521

LOYOLA ACADEMY PARKING LOT

SITE PLAN

1100 LARAMIE AVENUE
WILMETTE, IL 60091

LOYOLA ACADEMY

PROJ MGR:	MDB
PROJ ENG:	MLM
DATE:	02/24/16
PROJ NO.	25174

DRAWING NO:

3

OF 8 SHEETS

F:\CUSTOMERS\L\LOYOLA ACADEMY\PROJECTS\25174 – LOYOLA ACADEMY PARKING LOT DESIGN AND CONSTRUCTION\DWG\PLAN\25174 – SITE PLAN.DWG

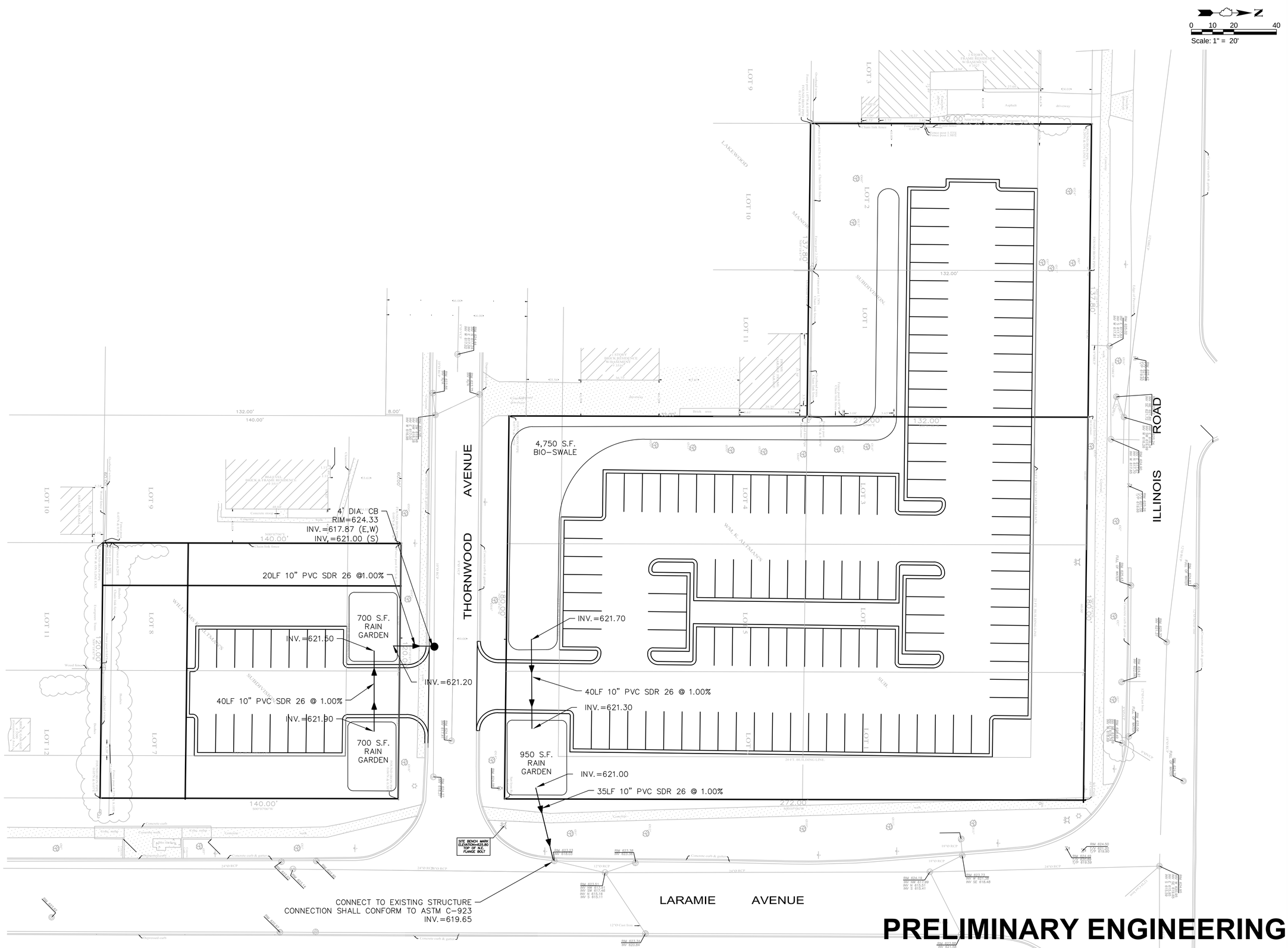

PRELIMINARY ENGINEERING
NOT FOR CONSTRUCTION

REVISIONS

NO.	DATE	MNGR	DESCRIPTION
1	########	XXX	**
2	########	XXX	**
3	########	XXX	**
4	########	XXX	**

K-PLUS ENGINEERING, LLC
WWW.KPLUS.COM
312.207.1600
329 W. 18TH STREET
CHICAGO, IL 60616
15 SPINNING WHEEL ROAD
HINSDALE, IL 60521

LOYOLA ACADEMY PARKING LOT

UTILITY PLAN

1100 LARAMIE AVENUE
WILMETTE, IL 60091

LOYOLA ACADEMY

PROJ MGR:	MDB
PROJ ENG:	MLM
DATE:	02/24/16
PROJ NO.	25174

DRAWING NO:

4

OF 8 SHEETS

F:\CUSTOMERS\L\LOYOLA ACADEMY\PROJECTS\25174 - LOYOLA ACADEMY PARKING LOT DESIGN AND CONSTRUCTION\DWG\PLAN\25174- UTILITY PLAN.DWG

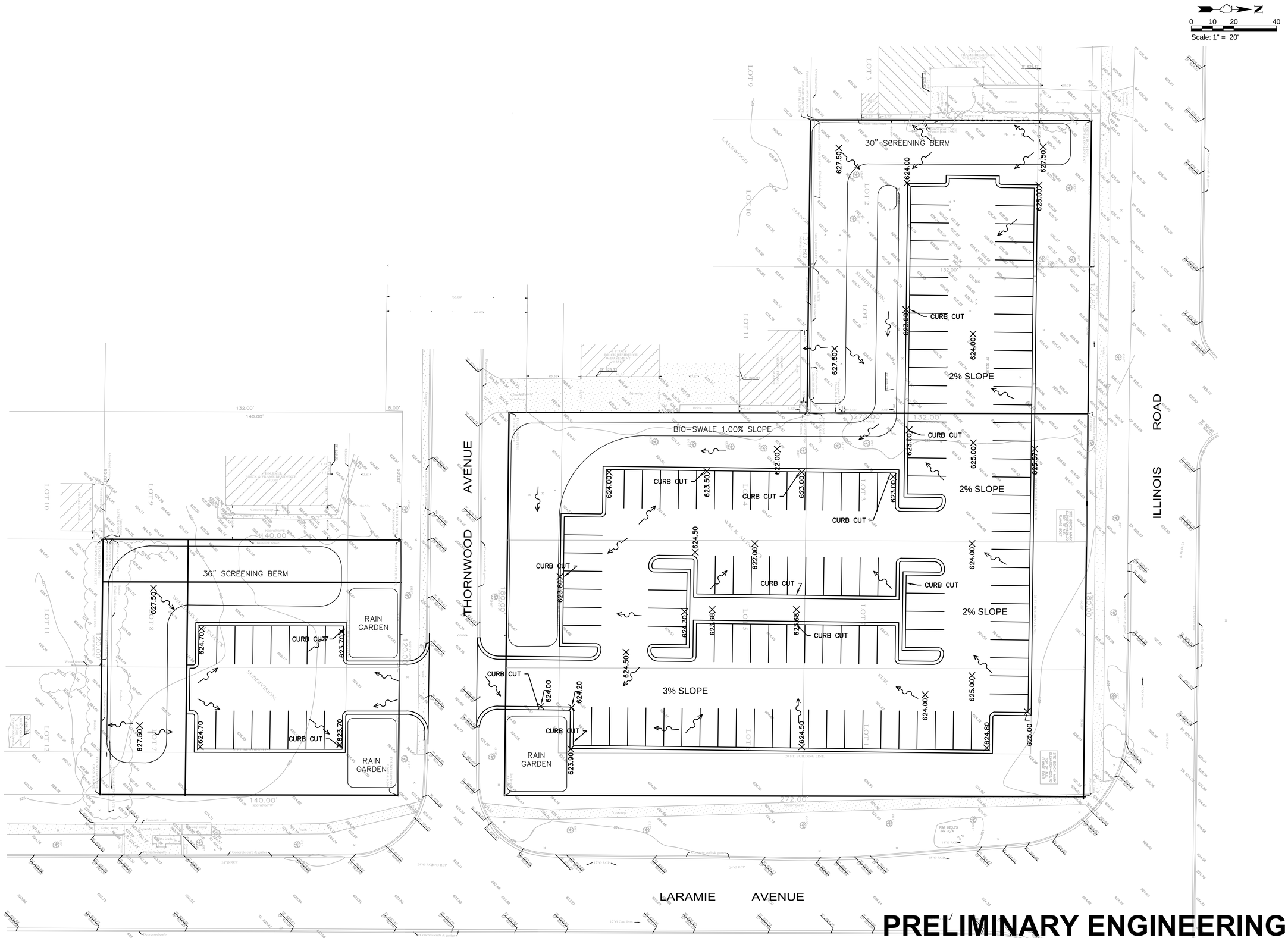

PRELIMINARY ENGINEERING
NOT FOR CONSTRUCTION

REVISIONS

NO.	DATE	MNGR	DESCRIPTION

K-PLUS ENGINEERING, LLC
WWW.KPLUS.COM
312.207.1600
329 W. 18TH STREET
CHICAGO, IL 60616
15 SPINNING WHEEL ROAD
HINSDALE, IL 60521

LOYOLA ACADEMY PARKING LOT
GRADING PLAN
1100 LARAMIE AVENUE
WILMETTE, IL 60091
LOYOLA ACADEMY

PROJ MGR:	MDB
PROJ ENG:	MLM
DATE:	02/24/16
PROJ NO.	25174

DRAWING NO:
5
OF 8 SHEETS

F:\CUSTOMERS\L\LOYOLA ACADEMY\PROJECTS\25174 - LOYOLA ACADEMY PARKING LOT DESIGN AND CONSTRUCTION\DWG\PLAN\25174- GRADING PLAN.DWG

EROSION CONTROL NOTES:

1. THIS WORK SHALL BE PERFORMED IN ACCORDANCE WITH THE PROCEDURES AND STANDARDS FOR URBAN SOIL EROSION AND SEDIMENTATION CONTROL IN ILLINOIS. THE I.E.P.A STANDARDS AND SPECIFICATIONS FOR SOIL EROSION AND SEDIMENTATION CONTROL, AND WITH ALL APPLICABLE COUNTY AND LOCAL ORDINANCES AND REGULATIONS.
2. ANY SOIL EROSION CONTROL MEASURES, IN ADDITION TO THOSE OUTLINED IN THESE PLANS AND WHICH ARE DEEMED NECESSARY BY THE OWNER, ENGINEER, AND MUNICIPAL ENGINEER SHALL BE IMPLEMENTED IMMEDIATELY BY THE CONTRACTOR.
3. STREETS ADJACENT TO THE SITE SHALL BE KEPT FREE OF DIRT, MUD, AND DEBRIS.
4. THE CONTRACTOR SHALL BE RESPONSIBLE FOR THE PROPER INSTALLATION AND MAINTENANCE OF ALL TEMPORARY AND PERMANENT EROSION CONTROL DEVICES.
5. THE CONTRACTOR SHALL INSPECT AND DOCUMENT EROSION CONTROL MEASURES ON A WEEKLY BASIS AND AFTER ANY RAINFALL EVENT IN EXCESS OF ONE–HALF INCH.
6. NO SEDIMENT SHALL BE ALLOWED TO ENTER THE EXISTING STORM SEWER SYSTEM. THE UNDERGROUND CONTRACTOR SHALL INSTALL FLEXSTORM CATCH–IT FILTERS (OR APPROVED EQUIVALENT) UNDER ALL STORM STRUCTURE GRATES AND OPEN LIDS IMMEDIATELY AFTER CONSTRUCTION.
7. THE TEMPORARY EROSION CONTROL MEASURES SHALL BE PLACED EFFECTIVELY UNTIL ALL THE PERMANENT EROSION CONTROL ITEMS ARE FULLY FUNCTIONAL.
8. THE GUARANTEE PERIOD SHALL BEGIN AFTER ALL THE PERMANENT EROSION CONTROL MEASURES ARE FULLY FUNCTIONAL AND ACCEPTABLE TO OWNER OR HIS REPRESENTATIVE.
9. UPON COMPLETION OF TOPSOIL RESPREAD OPERATIONS, ALL DISTURBED AREAS SHALL BE SEEDED, SODDED, OR LANDSCAPED AS NOTED ON THE PLAN.
10. SOIL DISTURBANCE SHALL BE CONDUCTED IN SUCH A MANNER AS TO MINIMIZE EROSION. SOIL STABILIZATION MEASURES SHALL CONSIDER THE TIME OF YEAR, SITE CONDITIONS AND THE USE OF TEMPORARY OR PERMANENT MEASURES.
11. SOIL EROSION AND SEDIMENT CONTROL FEATURES SHALL BE CONSTRUCTED PRIOR TO THE COMMENCEMENT OR UPLAND DISTURBANCE.
12. TEMPORARY SOIL STABILIZATION SHALL BE APPLIED TO DISTURBED AREAS WITHIN 14 CALENDAR DAYS OF THE END OF ACTIVE HYDRAULIC DISTURBANCE. PERMANENT STABILIZATION SHALL BE DONE WITHIN 14 DAYS AFTER COMPLETION OF FINAL GRADING OF THE SOIL.
13. ALL STORM SEWER AND SANITARY SEWER FACILITATES THAT ARE OR WILL BE FUNCTIONING DURING CONSTRUCTION SHALL BE PROTECTED, FILTERED, OR OTHERWISE TREATED TO REMOVE SEDIMENT.
15. ALL TEMPORARY AND PERMANENT EROSION CONTROL MEASURES MUST BE MAINTAINED AND REPAIRED AS NEEDED. THE GENERAL CONTRACTOR WILL BE RESPONSIBLE FOR INSPECTION AND REPAIR DURING CONSTRUCTION. THE OWNER WILL BE RESPONSIBLE FOR INSPECTION AND REPAIR DURING CONSTRUCTION. THE OWNER WILL BE RESPONSIBLE IF EROSION CONTROL IS REQUIRED AFTER THE CONTRACTOR HAS COMPLETED THE PROJECT.
16. THE EROSION CONTROL MEASURES INDICATED ON THE PLANS ARE THE MINIMUM REQUIREMENTS. ADDITIONAL MEASURES MAY BE REQUIRED AS DIRECTED BY THE ENGINEER OR GOVERNING AGENCY.
17. THE GRADING AND PREPARATION OF THE SITE SHALL NOT ALLOW FOR PONDING OF STORMWATER AND SHALL PROVIDE POSITIVE DRAINAGE OF STORMWATER.
18. ALL SANITARY SEWER, CATCH BASINS, AND LIFT STATION PROVIDED WITHIN THIS PROJECT ARE TO BE CLEANED AT THE END OF CONSTRUCTION OF THE PROJECT AND PRIOR TO FINAL ACCEPTANCE. CLEANING MAY ALSO BE REQUIRED DURING THE COURSE OF CONSTRUCTION OF THE PROJECT IF IT IS DETERMINED THAT THE SILT AND DEBRIS TRAPS ARE NOT PROPERLY FUNCTIONING AND THEIR PERFORMANCE IS IMPAIRED.

CONSTRUCTION SEQUENCE:

1. INSTALL INLET PROTECTION AND EROSION CONTROL ITEMS AS IDENTIFIED ON THE PLANS.
2. PROVIDE STORMWATER MANAGEMENT FOR THE PROJECT SITE.
3. CONSTRUCT ITEMS PER PLAN AND CONSTRUCT PROPOSED ITEMS PER PLANS.
4. RE–VEGITATE DISTURBED AREAS.

CONSTRUCTION START DATE AUGUST 2016
CONSTRUCTION COMPLETION DATE NOVEMBER 2016
CONSTRUCTION SEQUENCING ORDER, START AND COMPLETION DATE MAY BE SUBJECT TO CHANGE DUE TO UNFORESEEN CONDITIONS THAT EFFECT SCHEDULING, LEAD/LAG TIME, OTHER OUTSIDE FACTORS.

EROSION CONTROL QUANTITIES

SILT FENCE – 1645 LF
INLET PROTECTION – 14

EROSION CONTROL LEGEND

SILT FENCE:

INLET PROTECTION:

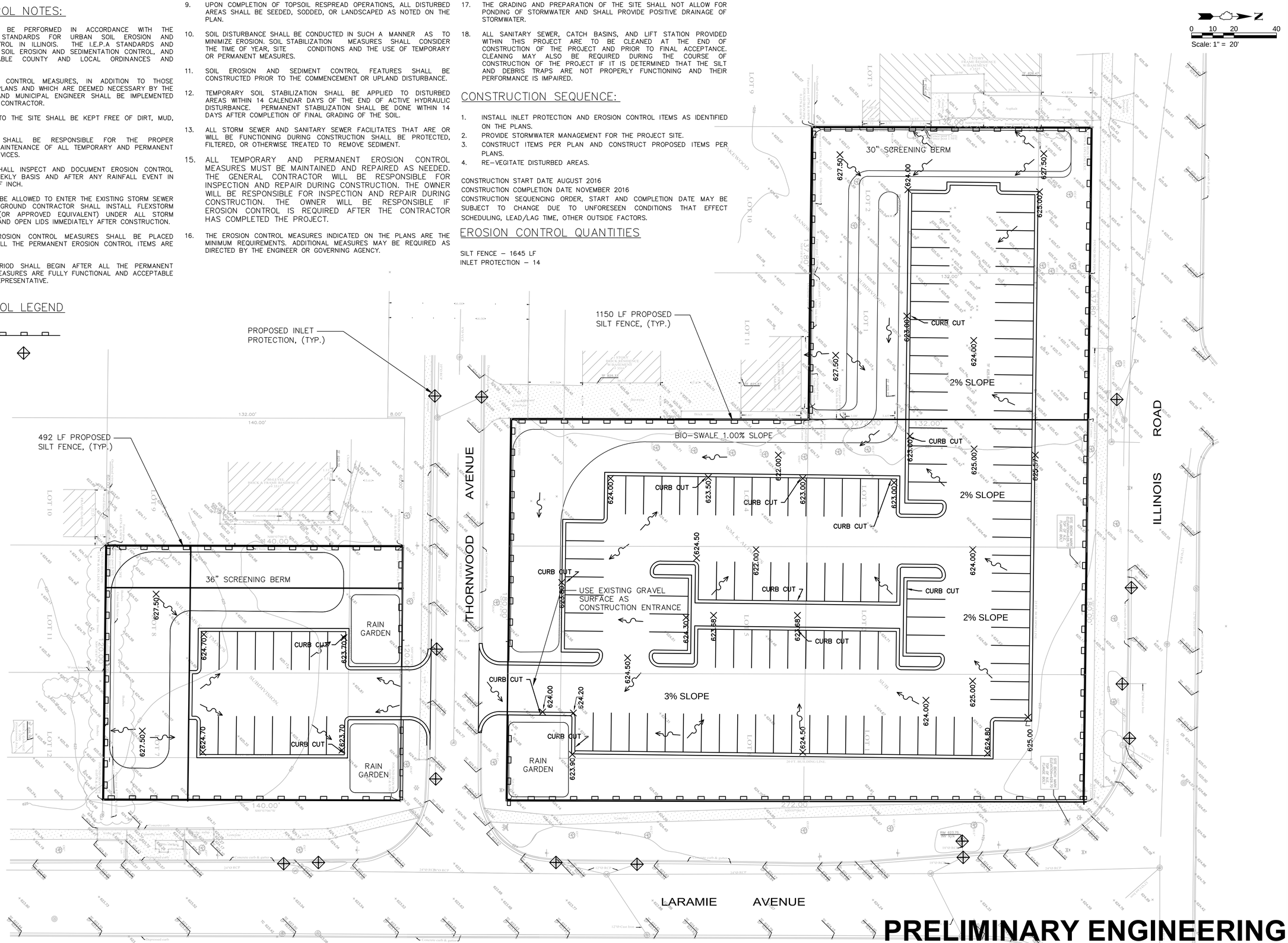

PRELIMINARY ENGINEERING
NOT FOR CONSTRUCTION

REVISIONS			
NO.	DATE	MNGR	DESCRIPTION

K-PLUS ENGINEERING, LLC
WWW.KPLUS.COM
312.207.1600
329 W. 18TH STREET
CHICAGO, IL 60616
15 SPINNING WHEEL ROAD
HINSDALE, IL 60521

LOYOLA ACADEMY PARKING LOT
SWPPP PLAN
1100 LARAMIE AVENUE
WILMETTE, IL 60091
LOYOLA ACADEMY

PROJ MGR:	MDB
PROJ ENG:	MLM
DATE:	02/24/16
PROJ NO.	25174

DRAWING NO:
6
OF 8 SHEETS

F:\CUSTOMERS\L\LOYOLA ACADEMY\PROJECTS\25174 – LOYOLA ACADEMY PARKING LOT DESIGN AND CONSTRUCTION\DWG\PLAN\25174– SWPPP PLAN.DWG

CONSTRUCTION NOTES, SPECIFICATIONS, STANDARDS AND SPECIAL PROVISIONS:

REFERENCED SPECIFICATIONS:

1. UNLESS MODIFIED BY THE CONTRACT DOCUMENTS ALL CONSTRUCTION SHALL BE DONE IN ACCORDANCE WITH THE LATEST OR SPECIFIED EDITIONS OF THE FOLLOWING, EXCEPT AS MODIFIED HEREIN OR ON THE PLANS:

   A. STATE OF ILLINOIS STANDARD SPECIFICATIONS: "STANDARD SPECIFICATIONS FOR ROADS AND BRIDGE CONSTRUCTION (IDOT STANDARDS)", THE "ILLINOIS MANUAL ON UNIFORM TRAFFIC CONTROL DEVICES FOR STREETS AND HIGHWAYS", THE "STANDARD SPECIFICATIONS FOR TRAFFIC ITEMS", FOR ALL IMPROVEMENTS EXCEPT SANITARY SEWER AND WATER MAIN CONSTRUCTION;
   B. STANDARD SPECIFICATIONS FOR WATER AND SEWER MAIN CONSTRUCTION IN ILLINOIS, LATEST EDITION (SSWS) FOR SEWER AND WATER MAIN CONSTRUCTION;
   C. THE "METROPOLITAN WATER RECLAMATION DISTRICT OF GREATER CHICAGO SEWER PERMIT ORDINANCE",
   D. THE VILLAGE OF WILMETTE MUNICIPAL CODE,
   E. IN CASE OF CONFLICT BETWEEN THE APPLICABLE ORDINANCES NOTED, THE MORE STRINGENT SHALL TAKE PRECEDENCE AND SHALL CONTROL ALL CONSTRUCTION.

NOTIFICATIONS:

1. THE MWRD LOCAL SEWER SYSTEMS SECTION FIELD OFFICE MUST BE NOTIFIED AT LEAST TWO (2) WORKING DAYS PRIOR TO THE COMMENCEMENT OF ANY WORK (CALL 708-588-4055).

2. THE VILLAGE OF WILMETTE ENGINEERING DEPARTMENT AND PUBLIC MUST BE NOTIFIED AT LEAST 24 HOURS PRIOR TO THE START OF CONSTRUCTION AND PRIOR TO EACH PHASE OF WORK. CONTRACTOR SHALL DETERMINE ITEMS REQUIRING INSPECTION PRIOR TO START OF CONSTRUCTION OR EACH WORK PHASE.

3. THE CONTRACTOR SHALL NOTIFY ALL UTILITY COMPANIES PRIOR TO BEGINNING CONSTRUCTION FOR THE EXACT LOCATIONS OF UTILITIES AND FOR THEIR PROTECTION DURING CONSTRUCTION. IF EXISTING UTILITIES ARE ENCOUNTERED THAT CONFLICT IN LOCATION WITH NEW CONSTRUCTION, IMMEDIATELY NOTIFY THE ENGINEER SO THAT THE CONFLICT CAN BE RESOLVED. CALL J.U.L.I.E. AT 1-800-892-0123.

GENERAL NOTES:

1. ALL ELEVATIONS SHOWN ON PLANS REFERENCE THE NORTH AMERICAN VERTICAL DATUM OF 1988 (NAVD88). CONVERSION FACTOR IS 0.312+Z(USGS) FT.

2. MWRD, THE MUNICIPALITY AND THE OWNER OR OWNER'S REPRESENTATIVE SHALL HAVE THE AUTHORITY TO INSPECT, APPROVE, AND REJECT THE CONSTRUCTION IMPROVEMENTS.

3. THE CONTRACTOR(S) SHALL INDEMNIFY THE OWNER, ENGINEER, MUNICIPALITY, MWRD, AND THEIR AGENTS, FROM ALL LIABILITY INVOLVED WITH THE CONSTRUCTION, INSTALLATION, OR TESTING OF THIS WORK ON THE PROJECT.

4. THE PROPOSED IMPROVEMENTS MUST BE CONSTRUCTED IN ACCORDANCE WITH THE ENGINEERING PLANS AS APPROVED BY MWRD AND THE MUNICIPALITY UNLESS CHANGES ARE APPROVED BY MWRD, THE MUNICIPALITY, OR AUTHORIZED AGENT. THE CONSTRUCTION DETAILS, AS PRESENTED ON THE PLANS, MUST BE FOLLOWED. PROPER CONSTRUCTION TECHNIQUES MUST BE FOLLOWED ON THE IMPROVEMENTS INDICATED ON THE PLANS.

5. THE LOCATION OF VARIOUS UNDERGROUND UTILITIES WHICH ARE SHOWN ON THE PLANS ARE FOR INFORMATION ONLY AND REPRESENT THE BEST KNOWLEDGE OF THE ENGINEER. VERIFY LOCATIONS AND ELEVATIONS PRIOR TO BEGINNING THE CONSTRUCTION OPERATIONS.

6. ANY EXISTING PAVEMENT, SIDEWALK, DRIVEWAY, ETC., DAMAGED DURING CONSTRUCTION OPERATIONS AND NOT CALLED FOR TO BE REMOVED SHALL BE REPLACED AT THE EXPENSE OF THE CONTRACTOR.

7. MATERIAL AND COMPACTION TESTING SHALL BE PERFORMED IN ACCORDANCE WITH THE REQUIREMENTS OF THE MUNICIPALITY, MWRD, AND OWNER.

8. THE UNDERGROUND CONTRACTOR SHALL MAKE ALL NECESSARY ARRANGEMENTS TO NOTIFY ALL INSPECTION AGENCIES.

9. ALL NEW AND EXISTING UTILITY STRUCTURES ON SITE AND IN AREAS DISTURBED DURING CONSTRUCTION SHALL BE ADJUSTED TO FINISH GRADE PRIOR TO FINAL INSPECTION.

10. RECORD DRAWINGS "AS-BULTS" SHALL BE KEPT BY THE CONTRACTOR AND SUBMITTED TO THE ENGINEER AS SOON AS UNDERGROUND IMPROVEMENTS ARE COMPLETED. FINAL PAYMENTS TO THE CONTRACTOR SHALL BE HELD UNTIL THEY ARE RECEIVED. ANY CHANGES IN LENGTH, LOCATION OR ALIGNMENT SHALL BE SHOWN IN RED.

11. ALL WYES OR BENDS SHALL BE LOCATED FROM THE DOWNSTREAM MANHOLE. ALL VALVES, B-BOXES, TEES OR BENDS SHALL BE TIED TO A FIRE HYDRANT.

12. ALL COORDINATES AND/OR DIMENSIONS REFER TO EDGE OF PAVEMENT; CENTERLINE OF MANHOLE, PIPE OR STRUCTURE; OR AS SHOWN.

13. ALL AREAS IMPACTED BY OPERATIONS OF THE CONTRACTOR SHALL BE RETURNED TO THE STATE IT WAS FOUND PRIOR TO NEW CONSTRUCTION, THE CONTRACTOR SHALL MAKE EVERY EFFORT TO KEEP THEIR OPERATIONS WITHIN THE PROJECT LIMITS.

14. THE CONTRACTOR IS TO HAVE A COMPETENT SUPERINTENDENT ON THE PROJECT SITE AT ALL TIMES, IRRESPECTIVE OF THE AMOUNT OF WORK SUBLET. THE SUPERINTENDENT SHALL BE CAPABLE OF READING AND UNDERSTANDING THE PLANS AND SPECIFICATIONS, SHALL HAVE FULL AUTHORITY TO EXECUTE ORDERS TO EXPEDITE THE PROJECT AND SHALL BE RESPONSIBLE FOR SCHEDULING AND HAVING CONTROL OF ALL THE WORK AS THE AGENT OF THE GENERAL CONTRACTOR. FAILURE TO COMPLY WITH THIS PROVISION MAY RESULT IN A SUSPENSION OF WORK.

15. IT IS THE CONTRACTOR'S RESPONSIBILITY TO ASCERTAIN EXISTING FIELD CONDITIONS BEFORE COMMENCEMENT OF WORK BEGINS.

16. WHERE NEW WORK MEETS EXISTING FEATURES TO REMAIN FIELD CHECK ALL DIMENSIONS AND ELEVATIONS BEFORE PROCEEDING WITH CONSTRUCTION.

17. CONTRACTOR WILL BE REQUIRED TO COMPLY WITH ALL STATE REGULATIONS REGARDING AIR, WATER AND NOISE POLLUTION.

18. THE GENERAL CONTRACTOR IS RESPONSIBLE FOR ALL JOBSITE LAYOUT AND SURVEY DURING CONSTRUCTION. THE COST SHALL BE CONSIDERED INCIDENTAL TO THE COST OF THE CONTRACT.

19. WHENEVER THE PERFORMANCE OF WORK IS INDICATED ON THE PLANS, AND NO ITEM IS INCLUDED IN THE CONTRACT FOR PAYMENT, THE WORK SHALL BE CONSIDERED INCIDENTAL TO THE CONTRACT, AND NO ADDITIONAL COMPENSATION WILL BE ALLOWED.

20. IT IS THE RESPONSIBILITY OF THE CONTRACTOR TO PROTECT ALL PAVEMENT OPENINGS, OPEN HOLES, EQUIPMENT AND RUBBLE LEFT IN THE PUBLIC RIGHT-OF-WAY. THE CONTRACTOR SHALL MAINTAIN HIGH VISIBILITY OF ALL TEMPORARY HAZARDS TO PEDESTRIANS AND MOTORISTS.

21. THE CONTRACTOR IS ADVISED THAT HE/SHE SHALL BE REQUIRED TO IMPLEMENT AND MAINTAIN EROSION AND SEDIMENT CONTROLS IN ACCORDANCE WITH THE ILLINOIS URBAN MANUAL AND IDOT STANDARD SPECIFICATIONS, SECTION 280. PERIMETER CONTROL METHODS SHALL BE IMPLEMENTED TO PROTECT DISTURBED AREAS FROM OFFSITE AND ONSITE RUNOFF. THE CONTRACTOR SHALL MINIMIZE THE EXTENT AND DURATION OF EXPOSED AREAS. TEMPORARY EROSION CONTROL PRACTICES SHALL BE APPLIED AS SOON AS PRACTICAL TO STABILIZE EXPOSED SOILS.

22. SHOULD THE CONTRACTOR CHOOSE TO DISPOSE OF UNCONTAMINATED SOIL WITH CLEAN CONSTRUCTION AND DEMOLITION DEBRIS (CCDD) AT A CCDD FILL OPERATION, IT SHALL BE THE CONTRACTOR'S RESPONSIBILITY TO PERFORM ALL NECESSARY FIELD AND LABORATORY ANALYSIS AND TO OBTAIN THE LICENSED PROFESSIONAL ENGINEER'S CERTIFICATION REQUIRED AS PER PUBLIC ACT 96-1416 TO USE THE SITE. NO ADDITIONAL COMPENSATION WILL BE PROVIDED.

23. THE GRADING AND PREPARATION OF THE SITE SHALL NOT ALLOW FOR PONDING OF STORMWATER AND SHALL PROVIDE POSITIVE DRAINAGE OF STORMWATER.

STORM SEWER:

1. PRIOR TO FINAL ACCEPTANCE, ALL DRAINAGE STRUCTURES SHALL BE FREE OF DIRT AND DEBRIS.

2. ALL STORM MANHOLE FRAMES WITH CLOSED LIDS TO BE FURNISHED AS PART OF THIS CONTRACT SHALL HAVE CAST INTO THE LID THE FOLLOWING WORD: "STORM". SEE DETAIL.

3. FRAME ELEVATIONS GIVEN ON THE PLANS ARE ONLY TO ASSIST THE CONTRACTOR IN DETERMINING THE APPROXIMATE OVERALL HEIGHT OF THE STRUCTURE. FRAMES ON ALL STRUCTURES WILL BE ADJUSTED TO THE FINAL ELEVATION AND CROSS SLOPE OF THE AREA IN WHICH THEY ARE LOCATED.

4. STORM SEWERS SHALL BE INSTALLED IN ACCORDANCE WITH DIVISION V OF THE "STANDARD SPECIFICATIONS FOR WATER AND SEWER CONSTRUCTION IN ILLINOIS, 7TH EDITION."

5. TRENCH CONDITIONS SHALL BE AS DEPICTED IN CONSTRUCTION PLAN DETAILS.

6. TRENCHES SHALL BE KEPT WATER-FREE AND AS DRY AS POSSIBLE DURING BEDDING, LAYING, AND JOINTING AND FOR AS LONG A PERIOD AS REQUIRED. AS SOON AS POSSIBLE AFTER THE THE JOINT IS MADE, SUFFICIENT BEDDING SHALL BE PLACED AND COMPACTED ALONG EACH SIDE OF THE PIPE TO OFFSET CONDITIONS THAT MIGHT TEND TO MOVE THE PIPE OFF LINE AND OFF GRADE.
7. THE COST OF TRENCH BACKFILL SHALL BE CONSIDERED INCIDENTAL TO THE COST OF STORM SEWER PIPE AND SHALL CONFORM TO SECTION 542 & 208 OF THE "STANDARD SPECIFICATIONS".

UTILITIES GENERAL:

1. THE CONTRACTOR SHALL BE RESPONSIBLE FOR THE PROTECTION OF ALL UNDERGROUND OR SURFACE UTILITIES EVEN THOUGH THEY MAY NOT BE SHOWN ON THE PLANS. ANY UTILITY THAT IS DAMAGED DURING CONSTRUCTION SHALL BE REPAIRED OR REPLACED TO THE SATISFACTION OF THE OWNER AND OPERATOR OF THE DAMAGED UTILITY. THIS WORK SHALL BE AT THE CONTRACTOR'S EXPENSE.

2. CARE SHALL BE EXERCISED BY THE CONTRACTOR IN CARRYING OUT EARTH AND/OR TRENCHING OPERATIONS SO THAT LOCAL SERVICES, WATER VALVES, MANHOLES, CATCH BASINS, INLETS, BUFFALO BOXES, AND OTHER STRUCTURES ARE NOT DAMAGED OR REMOVED. ANY DAMAGE DONE BY THE CONTRACTOR, WHETHER THE STRUCTURE OR SERVICE IS VISIBLE AT THE GROUND SURFACE OR NOT, SHALL BE REPAIRED OR REPLACED BY THE CONTRACTOR AS REQUIRED BY THE ENGINEER AT THE CONTRACTOR'S EXPENSE, AND NO ADDITIONAL COMPENSATION WILL BE ALLOWED.

WATER MAIN:

1. ALL WATER MAIN PIPE MATERIALS SHALL CONFORM TO THE FOLLOWING STANDARD SPECIFICATIONS FOR SEWER AND WATER CONSTRUCTION IN ILLINOIS (LATEST EDITION) DIVISION IV:

PIPE MATERIAL	PIPE SPECIFICATION
DUCTILE IRON	ANSI A21.51 & ANSI 21.50 AWWA C151 & AWWA C104 W/ MECHANICAL OR RUBBER RING (SLIP SEAL OR PUSH ON) JOINTS
POLYVINYL CHLORIDE	AWWA: C900, C905, C906, C909 ASTM: D1785, D1784, F441, D2241, F442

2. RESILIENT SEAT GATE VALVES (6 INCHES - 12 INCHES, INCL.) SHALL BE MUELLER OR APPROVED EQUAL, CONFORMING TO AWWA C509-80. VALVES SHALL BE BRONZE STEMMED, MODIFIED WEDGE DISC PATTERN DESIGNED FOR 200 PSI WORKING PRESSURE. EACH VALVE SHALL BE TESTED TO FOUR HUNDRED (400) POUNDS HYDROSTATIC TEST PRESSURE AND SHALL BE FURNISHED WITH AN O-RING STEM SEAL. VALVES SHALL BE CLOSED BY TURNING THE STEM IN CLOCKWISE DIRECTION WITH TWO (2) SQUARE OPERATING NUTS.

3. WATER MAIN FITTINGS (BENDS, ELBOWS, TEES, INCREASES, REDUCERS, ETC.) MAY OR MAY NOT BE SPECIFICALLY REFERENCED ON THE CONSTRUCTION PLANS, HOWEVER THEY ARE TO BE CONSIDERED AS INCIDENTAL AND INCLUDED IN THE LINEAL FOOTAGE COST OF THE WATER MAIN.

4. WATER MAIN AND SERVICES SHALL HAVE A MINIMUM BURY DEPTH OF FIVE (5) FEET BELOW FINISHED GROUND SURFACE.

5. THRUST BLOCKING SHALL BE INSTALLED ON WATER MAINS AT ALL BENDS, TEES, ELBOWS, ETC. COST OF THRUST BLOCKING, BENDS, ELBOWS, AND TEES SHALL BE CONSIDERED INCIDENTAL TO THE PRICE OF WATER MAIN PIPE.

6. ALL WATER MAINS SHALL BE LAID AT LEAST 10 FEET HORIZONTALLY FROM ANY EXISTING OR PROPOSED SEWER. THE DISTANCE SHALL BE MEASURED FROM THE OUTSIDE OF PIPE TO OUTSIDE OF PIPE. ALL SEWERS CROSSING WATER MAINS SHALL BE LAID TO PROVIDE A MINIMUM VERTICAL CLEARANCE OF 18 INCHES BETWEEN THE OUTSIDE OF THE WATER MAIN AND THE OUTSIDE OF THE SEWER. WHEN IT IS IMPOSSIBLE TO OBTAIN PROPER HORIZONTAL AND VERTICAL SEPARATION AS STIPULATED, THE SEWER SHALL BE DESIGNED AND CONSTRUCTED PER WATER MAIN SPECIFICATIONS.

7. ALL WATER MAINS SHALL BE SUBJECTED TO A PRESSURE TEST BY THE CONTRACTOR. HYDROSTATIC PRESSURE TEST AND LEAKAGE SHALL BE BASED ON THE REQUIREMENTS IN THE STANDARD SPECIFICATIONS OR AS OTHERWISE REQUIRED BY THE LOCAL JURISDICTION.

8. THE UNDERGROUND CONTRACTOR SHALL CONSIDER INCIDENTAL TO THE CONTRACT THE CHLORINATION AND TESTING OF EXISTING WATER MAIN WHERE CONNECTIONS TO AND INCLUSION OF SUCH MAINS IS INDICATED ON THE DRAWINGS. IN THE EVENT THAT THE PRESSURE TESTS INVOLVING EXISTING MAINS FAIL. AND SUCH FAILURES ARE ATTRIBUTABLE TO DEFECTIVE ORIGINAL WORKMANSHIP AND MATERIAL THE THEN CONTRACTOR SHALL BE ENTITLED TO ADDITIONAL PAYMENT FOR CORRECTING THE DEFICIENCIES.

9. THE COST OF TRENCH BACKFILL SHALL BE CONSIDERED INCIDENTAL TO THE COST OF WATER MAIN PIPE AND SHALL CONFORM TO SECTION 542 & 208 OF THE "STANDARD SPECIFICATIONS".

EROSION CONTROL NOTES:

1. THE CONTRACTOR SHALL BE RESPONSIBLE TO IMPLEMENT AND MAINTAIN EROSION AND SEDIMENT CONTROLS IN ACCORDANCE WITH THE ILLINOIS URBAN MANUAL, THE I.E.P.A STANDARDS AND IDOT STANDARD SPECIFICATIONS, SECTION 280. PERIMETER CONTROL METHODS SHALL BE IMPLEMENTED TO PROTECT DISTURBED AREAS FROM OFFSITE AND ONSITE RUNOFF. THE CONTRACTOR SHALL MINIMIZE THE EXTENT AND DURATION OF EXPOSED AREAS. TEMPORARY EROSION CONTROL PRACTICES SHALL BE APPLIED AS SOON AS PRACTICAL TO STABILIZE EXPOSED SOILS.

2. ALL SANITARY AND STORM SEWER STRUCTURES, AND LIFT STATION PROVIDED WITHIN THIS PROJECT ARE TO BE CLEANED AT THE END OF CONSTRUCTION AND PRIOR TO FINAL ACCEPTANCE. CLEANING MAY ALSO BE REQUIRED DURING THE COURSE OF CONSTRUCTION IF IT IS DETERMINED THAT THE SILT AND DEBRIS TRAPS ARE NOT PROPERLY FUNCTIONING AND THEIR PERFORMANCE IS IMPAIRED.

3. THE TEMPORARY EROSION CONTROL MEASURES SHALL BE PLACED EFFECTIVELY UNTIL ALL THE PERMANENT EROSION CONTROL ITEMS ARE FULLY FUNCTIONAL.

PAVEMENTS, CURBS, & WALKS:

1. ALL CURB RADII REFER TO EDGE OF PAVEMENT.

2. ANY DAMAGE TO EXISTING PAVING, SHALL BE REPAIRED IN ACCORDANCE WITH THE STANDARD SPECIFICATIONS FOR ROAD AND BRIDGE CONSTRUCTION (IDOT STANDARDS) AND PER THE REQUIREMENTS OF THE LOCAL JURISDICTION.

3. ALL PAVING WORK SHALL BE IN ACCORDANCE WITH THE STANDARD SPECIFICATIONS FOR ROAD AND BRIDGE CONSTRUCTION (IDOT STANDARDS) AND PER THE REQUIREMENTS OF THE LOCAL JURISDICTION.

4. WORK UNDER THIS SECTION SHALL INCLUDE FINAL SUBGRADE PREPARATION, FORMING, JOINTING, PLACEMENT OF PAVEMENT BASE COURSE MATERIALS, SUBSEQUENT BINDER COURSES AND SURFACE COURSES, FINISHING AND CURING OF CONCRETE, CLEAN UP OF WORK AREA, AND ALL RELATED WORK.

5. THE CONTRACTOR SHALL BE REQUIRED TO CLEAN THE SURFACE OF EACH SUCCESSIVE NEW HOT-MIX ASPHALT COURSE PRIOR TO PLACEMENT OF THE NEXT HOT-MIX ASPHALT COURSE AS DIRECTED BY THE ENGINEER. THE COST OF THIS WORK SHALL BE CONSIDERED INCIDENTAL TO THE COST OF PAVEMENT BEING INSTALLED.

6. CURBS SHALL BE DEPRESSED AT LOCATIONS WHERE: (1) PUBLIC WALKS/PEDESTRIAN PATHS INTERSECT CURB LINES AT STREET INTERSECTIONS (2) ADA ACCESS IS REQUIRED (3) DRIVEWAY LOCATIONS, UNLESS IDENTIFIED OTHERWISE.

7. BACKFILLING ALONG PAVEMENT AREAS TO RE-ESTABLISH ADJACENT GRADES SHALL BE CONSIDERED INCIDENTAL TO THE COST OF PAVEMENT WORK.

8. THE CONTRACTOR SHALL REMOVE ALL MATERIALS AND DEBRIS THAT RESULT FROM CONSTRUCTION ACTIVITY. NO ADDITIONAL COMPENSATION WILL BE PROVIDED FOR SUCH ACTIVITY.

9. TESTING OF SUB-BASE, BASE COURSE, BINDER COURSE, SURFACE COURSE, AND ALL CONCRETE WORK SHALL BE IN CONFORMANCE WITH THE STANDARD SPECIFICATIONS AND MUNICIPAL REQUIREMENTS.

10. BINDER COURSE SHALL BE PLACED ONLY WHEN TEMPERATURE IN THE SHADE IS AT LEAST 40° F (5° C) AND THE FORECAST IS FOR RISING TEMPERATURES. A UNIT WEIGHT OF 112 LB/SQ YD/IN SHALL BE UTILIZED FOR HMA CALCULATIONS.

11. SURFACE COURSE SHALL BE PLACED ONLY WHEN TEMPERATURE IN THE SHADE IS AT LEAST 45° F (8° C) AND THE FORECAST IS FOR RISING TEMPERATURES. A UNIT WEIGHT OF 112 LB/SQ YD/IN SHALL BE UTILIZED FOR HMA CALCULATIONS.

12. PLACEMENT OF BITUMINOUS PRIMING MATERIAL SHALL BE PERFORMED PER SECTION 1032. BITUMINOUS PRIME MATERIAL SHALL BE APPLIED AT A RATE OF 0.1 GAL/SQ YD.

13. CURB RAMPS SHALL CONFORM TO THE REQUIREMENTS OF SECTION 424.08 OF THE "STANDARD SPECIFICATIONS" AND THE WORK SHALL INCLUDE THE PLACEMENT OF DETECTABLE WARNINGS PER SECTION 424.09. THE CURB REPLACEMENT AT CURB RAMP LOCATIONS SHALL BE DEPRESSED CURB AND GUTTER FOR SIDEWALK CURB RAMPS THAT COMPLY WITH ADA STANDARDS.

14. PAVEMENT MARKING PAINT SHALL NOT BE APPLIED AT AIR TEMPERATURES BELOW 50 °F (10 °C), UNLESS APPROVED BY THE ENGINEER. THE PAINT SHALL BE APPLIED AT A MINIMUM THICKNESS OF 16 MILS (406 MM) AND REFLECTIVE BEADS SHALL BE APPLIED TO ALL PAINTED SURFACES AT THE MINIMUM RATE OF 6.0 LB/GAL (720 G/L) OF PAINT USED. BEFORE APPLYING THE PAVEMENT MARKING MATERIAL, THE PAVEMENT SHALL BE CLEAN, DRY, AND FREE OF DEBRIS OR ANY OTHER MATERIAL THAT WOULD REDUCE THE ADHESION OF THE MARKINGS ON THE PAVEMENT.

LEGEND

SILT FENCE
BUILDING REMOVAL
PAVEMENT REMOVAL
CURB REMOVAL
PROPOSED CONCRETE
REMOVAL
DOWNSPOUTS — DS
DRAINAGE FLOW
SPOT ELEVATION — 645.5 X
EXISTING CONTOUR — 610
PROPOSED CONTOUR — 610
STORM SEWER
WATER MAIN
B-BOX
SANITARY CLEAN OUT
UTILITY POLE

ABBREVIATIONS

ADJ. - ADJUST
BOC - BACK OF CURB
CB - CATCH BASIN
DIA. - DIAMETER
ELEV. - ELEVATION
EOP - EDGE OF PAVEMENT
FES - FLARED END SECTION
HMA - HOT-MIX ASPHALT
HWL - HIGH WATER LEVEL
INV - INVERT ELEVATION
MH - MANHOLE
MIN - MINIMUM
NTS - NOT TO SCALE
P.C.C. - PORTLAND CEMENT CONCRETE
PROP. - PROPOSED
R - RADIUS
RCP - REINFORCED CONCRETE PIPE
STM - STORM SEWER
TYP - TYPICAL
W/ - WITH

PRELIMINARY ENGINEERING
NOT FOR CONSTRUCTION

REVISIONS

NO.	DATE	MNGR	DESCRIPTION

K-PLUS ENGINEERING, LLC
WWW.KPLUS.COM
312.207.1600
329 W. 18TH STREET CHICAGO, IL 60616
15 SPINNING WHEEL ROAD HINSDALE, IL 60521

LOYOLA ACADEMY PARKING LOT
SPECIFICATIONS
1100 LARAMIE AVENUE WILMETTE, IL 60091
LOYOLA ACADEMY

PROJ MGR:	MDB
PROJ ENG:	MLM
DATE:	02/24/16
PROJ NO.	25174

DRAWING NO:
7
OF 8 SHEETS

F:\CUSTOMERS\L\LOYOLA ACADEMY\PROJECTS\25174 - LOYOLA ACADEMY PARKING LOT DESIGN AND CONSTRUCTION\DWG\PLAN\25174- SPECIFICATIONS.DWG

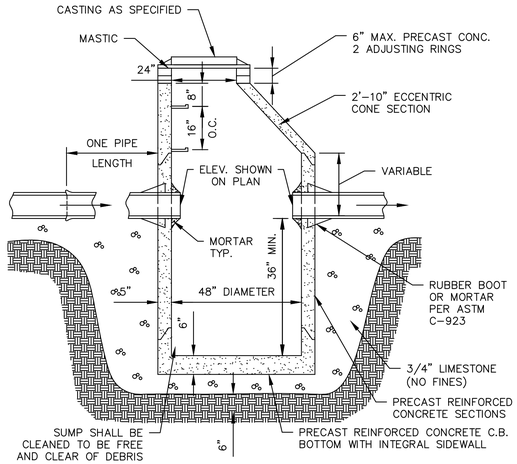

NOTES:

1. ADJUSTMENT: ANY STRUCTURE LOCATED WITHIN PAVEMENT SHALL REQUIRE THE USE OF AT LEAST ONE (1) RUBBER ADJUSTMENT RISER, INFRA-RISER BRAND OR APPROVED EQUAL, AND, IF NECESSARY, SAID RISER SHALL BE OF THE TAPERED TYPE IN ORDER TO MATCH THE PROPOSED GRADE OF THE ROADWAY. NO MORE THAN TWO (2) PRECAST CONCRETE ADJUSTING RINGS WITH SIX (6) INCH MAXIMUM HEIGHT ADJUSTMENT SHALL BE ALLOWED. ADJUSTMENTS WITHIN PAVEMENT THAT ARE LESS THAN THREE (3) INCHES IN HEIGHT SHALL CONSIST OF ONLY RUBBER ADJUSTMENT RISER(S). THE MINIMUM THICKNESS OF A RUBBER ADJUSTMENT RISER SHALL BE ONE (1) INCH. ADJUSTMENTS WITHIN PAVEMENT GREATER THAN THREE (3) INCHES IN HEIGHT SHALL USE A MINIMUM THREE (3) INCH PRECAST CONCRETE RISER FOR THE LOWER RISER, AND THE FINAL RISER SHALL BE OF THE RUBBER TYPE.

2. SEALING: ALL MATING SURFACES OF ADJUSTMENT RISER(S), STRUCTURE SECTIONS, AND FRAMES SHALL BE SEALED WITH A MASTIC SEALANT. IF MULTIPLE ADJUSTMENT RISERS ARE REQUIRED, A CONTINUOUS APPLICATION OF SEALANT SHALL BE APPLIED BETWEEN EACH UNIT.

3. PROVIDE CA-6 AGRREGATE BACK FILL AROUND CATCH BASIN TO SUBGRADE ELEVATIONS IN PAVED AREAS FOR SUBGRADE.

TYPE "A" CATCH BASIN DETAIL
N.T.S.

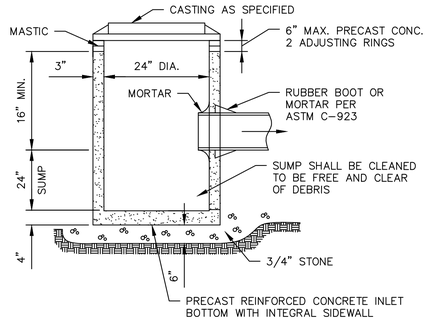

NOTES:

1. ADJUSTMENT: NO MORE THAN TWO (2) PRECAST CONCRETE ADJUSTING RINGS WITH SIX (6) INCH MAXIMUM HEIGHT ADJUSTMENT SHALL BE ALLOWED. ADJUSTMENTS WITHIN PAVEMENT THAT ARE LESS THAN THREE (3) INCHES IN HEIGHT SHALL CONSIST OF ONLY RUBBER ADJUSTMENT RISER(S). THE MINIMUM THICKNESS OF A RUBBER ADJUSTMENT RISER SHALL BE ONE (1) INCH.

2. PIPE AND FRAME SEALS: ALL PIPE CONNECTION OPENINGS SHALL BE PRECAST WITH RESILIENT RUBBER WATER TIGHT PIPE TO MANHOLE SLEEVES OR SEALS CONFORMING TO ASTM C-923.

3. SEALING: ALL NON-RUBBER MATING SURFACES, EXTERIOR JOINTS OF FRAMES, ADJUSTMENT RISER(S), FLAT SLAB TOP OR CONE SECTION (IF APPLICABLE) AND STRUCTURE SECTION SHALL BE SEALED WITH A UNIFORM APPLICATION OF BITUMINOUS MASTIC SEALANT. THE MATING SURFACES OF ALL RUBBER ADJUSTMENT RISERS SHALL BE SEALED WITH THE MANUFACTURER'S RECOMMENDED SEALANT FOR RUBBER ADJUSTMENT RISERS. IF MULTIPLE ADJUSTMENT RISERS ARE REQUIRED, A CONTINUOUS APPLICATION OF SEALANT SHALL BE APPLIED BETWEEN EACH UNIT. INTERIOR SURFACES SHALL BE SEALED WITH CONCRETE MORTAR OR EPOXY MORTAR. CONCRETE MORTAR OR EPOXY MORTAR WILL NOT BE USED ON MATING SURFACES AS A SEALANT BETWEEN ADJUSTMENT RISERS, STRUCTURE SECTIONS OR FRAMES

4. ALL BOTTOM SECTIONS SHALL BE MONOLITHICALLY PRECAST INCLUDING BASES AND INVERT FLOWLINES.

5. PROVIDE CA-6 AGGREGATE BACKFILL AROUND INLET TO SUBGRADE ELEVATION IN PAVED AREAS FOR SUBGRADE.

INLET WITH SUMP DETAIL
N.T.S.

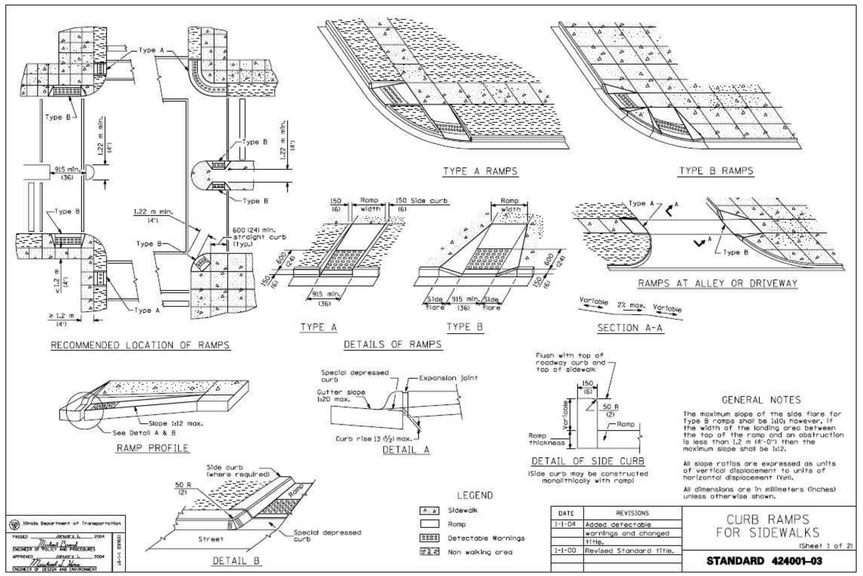

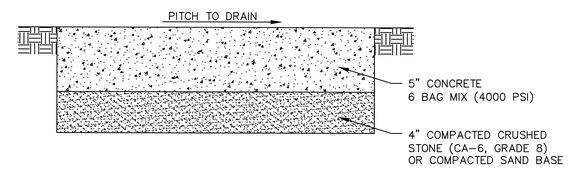

NOTES:

1. REINFORCING MATERIAL SHALL BE WELDED STEEL WIRE FABRIC MEETING ASTM A-185 OR APPROVED EQUAL

2. ADA CURB RAMPS SHALL BE PROVIDED AT SIDEWALK LOCATIONS ADJACENT TO DEPRESSED CURB AREAS

SIDEWALK DETAIL
N.T.S.

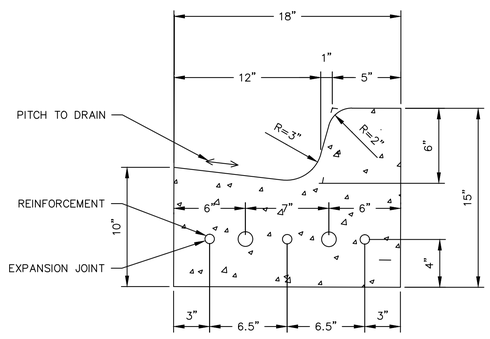

CURB & GUTTER DETAIL
N.T.S.

NOTES:

1. REINFORCEMENT: PROVIDE THREE (3) #5 REINFORCING BARS CONTINUOUS BETWEEN EXPANSION JOINTS.

2. EXPANSION JOINT: 3/4" THICK BITUMINOUS FILLER MATERIAL- PROVIDE TWO (2) #6 X 24" SMOOTH BARS WITH EXPANSION CAPS AT EACH EXPANSION JOINT. INSTALL AT ENDS OF ALL RADII AND NO FURTHER THAN SIXTY (60') FEET APART.

3. SAW THREE (3) EQUALLY SPACED CONTRACTION JOINTS AT TWENTY (20') FEET INTERVALS BETWEEN EXPANSION JOINTS. CONTRACTION JOINTS SHALL BE SAW-CUT IN THE UPPER ONE-THIRD OF CURB AND GUTTER WITHIN 3 DAYS OF PLACEMENT.

4. COST OF BARS SHALL BE INCLUDED IN THE UNIT PRICE (PER LINEAL FOOT) FOR CURB AND GUTTER.

CASTING SPECIFICATIONS

1. DUCTILE IRON CASTINGS SHALL BE GRADE 60-40-18 & SHALL BE TESTED IN ACCORDANCE WITH FEDERAL SPECIFICATIONS.

2. ALL LIDS AND COVERS SHALL BE MACHINED.

3. THE MANHOLE COVERS SHALL HAVE RAISED LETTERS

4. CASTINGS SHALL BE EAST JORDAN IRON WORKS 1050Z1 FRAME AND 1020A COVER.

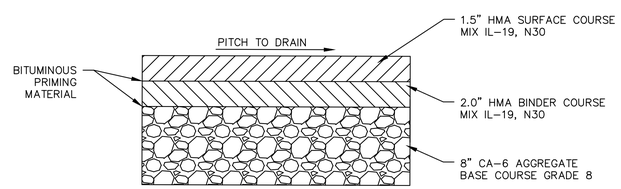

ASPHALT PARKING LOT DETAIL
N.T.S.

PRELIMINARY ENGINEERING
NOT FOR CONSTRUCTION

REVISIONS

NO.	DATE	MNGR	DESCRIPTION

K-PLUS ENGINEERING, LLC
WWW.KPLUS.COM
312.207.1600
329 W. 18TH STREET, CHICAGO, IL 60616
15 SPINNING WHEEL ROAD, HINSDALE, IL 60521

LOYOLA ACADEMY PARKING LOT
CONSTRUCTION DETAILS
1100 LARAMIE AVENUE
WILMETTE, IL 60091
LOYOLA ACADEMY

PROJ MGR:	MDB
PROJ ENG:	MLM
DATE:	02/24/16
PROJ NO.	25174

DRAWING NO: 8 OF 8 SHEETS

F:\CUSTOMERS\L\LOYOLA ACADEMY\PROJECTS\25174 - LOYOLA ACADEMY PARKING LOT DESIGN AND CONSTRUCTION\DWG\PLAN\25174- SPECIFICATIONS.DWG